CY4532 EZ-PD CCG3PA EVK POWER BOARD

CONTENTS

PAGE	DESCRIPTION
01	TITLE PAGE
02	BLOCK DIAGRAM
03	INTERFACE
04	SC8802 BATTERY CHARGER
05	SC8701 BUCK BOOST TYPE-A PATH
06	USB SERIAL & CCG4 CONNECTIONS
07	VCONN_FETS
08	REVISION HISTORY

Drawing Numbers	
PCBA	121-60407-01
PCB	600-60414-01
FAB DRW	610-60362-01
ASSY DRW	620-60370-01
SCH DRW	630-60304-01
PCB LBL	899-60120-01

CYPRESS SEMICONDUCTOR
198 CHAMPION COURT
SAN JOSE, CA 95134
(408) 943-2600

CYPRESS SEMICONDUCTOR © 2017

SCH Title : CY4532 EZ-PD CCG3PA EVK POWER BOARD

Page Title :TITLE PAGE

Size	Document Number	Drawn By	Approved By	Rev
A4	630-60304-01	PRVE	HITS	07

Date: Thursday, December 14, 2017 Sheet 1 of 8

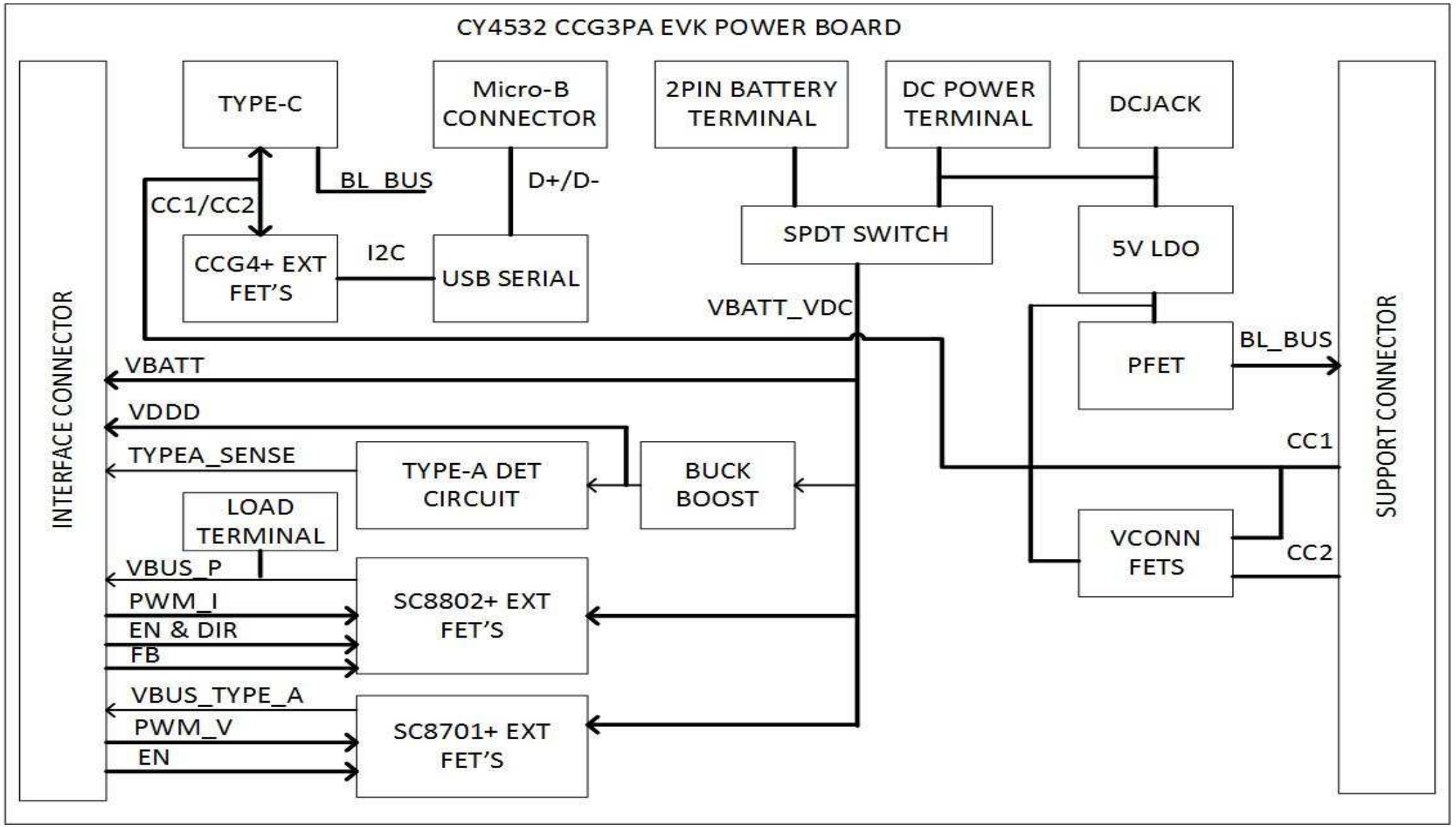

CYPRESS SEMICONDUCTOR
198 CHAMPION COURT
SAN JOSE, CA 95134
(408) 943-2600

CYPRESS SEMICONDUCTOR © 2017

SCH Title : CY4532 EZ-PD CCG3PA EVK POWER BOARD

Page Title :BLOCK DIAGRAM

Size	Document Number	Drawn By	Approved By	Rev
A4	630-60304-01	PRVE	HITS	07

Date: Thursday, December 14, 2017 Sheet 2 of 8

8701_PWM

PRPC003SAAN-RC J7

5 8701_PWM_V

CC1_VCONN_CTRL 7

SWD_DAT0_P0.0

DIR_ SELECTION

PRPC003SAAN-RC J9

4 8802_DIR

AXRES_P2.0

INTERFACE CONNECTOR

J10

4 8802_FB
4 CSP
CATH_COMP
VBAT_VDC_MON_P2.1
SWD_DAT0_P0.0
AXRES_P2.0
3 VBUS_C
VBUS_TYPEA
P1.1 SWD_CLK0_P0.1
P1.0 I_sense_P2.3
P2.2
VBUS_P 3,4
8802_EN 4
8802_PWM_I 4
8701_EN 5
VBUS_C 3
VDDD_CCG3PA
RETURN_GND
RETURN_GND
SBH11-PBPC-D13-ST-BK

Type-A Select

TP16 YELLOW NO LOAD

PRPC003SAAN-RC J6

reg_sel

CC2_VCONN_CTRL 7

SWD_CLK0_P0.1

CONFIG	J6	J7	J9
PROG	NC	NC	NC
Type-A	1-2	1-2	1-2
VCONN	2-3	2-3	1-2

INPUT CIRCUIT & BATTERY TERMINALS

DC INPUT
24V Max / 5A

J2 OSTTC020162

24_VIN D3 PMEG3050BEP,115

R1 0E NO LOAD

COLOUR: BLUE

LOAD ONLY
FOR 24V OPERATION

Power Adapter :1-2
Power Bank :2-3

SW1 SWITCH 500SSP1S1M1QEA

5A Max

VBAT_VDC 4,5

TP3 RED

VBAT_VDC

D1 SMBJ24A-TR

C1 1uF 50V

C2 0.1uF 50V

R4 499K 1%

VBAT_VDC_MON_P2.1

TP5 RED NO LOAD

R2 49.9K 1%

C3 0.1uF 50V

DC JACK
12V / 4.2A

J3 69410830100 2

12_VIN D2 PMEG3050BEP,115

BATTERY INPUT
1-CELL (2.7V - 3.6V)

J1 B2B-EH-A(LF)(SN)

B+ NO LOAD B- NO LOAD

BATTERY TERMINAL

VDDD POWER FOR CCG3PA

NO LOAD
FOR 24V OPERATION

VBAT_VDC R5 0E

L4 1uH 5A SRP4020TA-1R0M

U4 TPS63060DSCR

L1 L2 VIN VOUT EN FB VAUX PS/SYNC GND PGND PG

C44 10uF 25V

C43 10uF 25V

C42 0.1uF 50V

R59 0E

TP15 SMD TEST POINT

R60 1M 1%

R58 110K 5%

R57 1M 1%

TP13 RED NO LOAD

TP4 RED

C47 22uF 6.3V

C46 22uF 6.3V

C45 22uF 6.3V

+5V_BB *5V/2A*

NO LOAD
FOR 24V OPERATION

R54 0E

R46 0E TYPEA_HOT

R45 0E BL_SUPPLY

R47 0E VDDD_CCG3PA

TOP MOUNT

VCONN REGULATOR

24_VIN

U6 MIC29152WD-TR

IN OUT EN GND TAB ADJ

C80 10uF 50V

R83 0E

R94 100K 1%

R95 33K 1%

C87 22uF 6.3V

VCONN_REG

TP10 RED NO LOAD

VCONN_SUPPLY

R42 0E NO LOAD

LOAD ONLY
FOR 24V OPERATION

SUPPORT CONNECTOR

BL_VBUS

J11 SBH11-PBPC-D13-ST-BK

6 BL_CC1
7 CCG3PA_CC1

BL_CC2 6
CCG3PA_CC2 7

SC8802_PWM_V 4

LOAD TERMINAL 1

5A Max

J5 1935161

VBUS_C 3

Terminals provided to test 5A loading on the Type-C regulator

COLOUR: GREEN

VBUS_TYPEA SELECT SWITCH

reg_sel=low :: VBUS_TYPEA=5V
reg_sel=High :: VBUS_TYPEA=12V/9V

TYPEA_HOT

Up to 5V / 2A

Q1 SI2371EDS-T1-GE3

D7 PMEG3050BEP,115

C48 1uF 35V NO LOAD

R61 49.9K

reg_sel

TYPE-A DETECTION AND CURRENT SENSE

5 SUPPLY_TYPE_A

PE1206FKM470R02Z R105 0.02R,1W

VBUS_TYPEA

NO LOAD

U9 INA199A3DCKR

C104 0.1uF 50V

TOP LAYER

SMD TEST POINT

TP8

I_sense_P2.3

VDDD_CCG3PA

C103 1uF 50V

C100 0.1uF 50V NO LOAD

POWER ON INDICATION

J14

VDDD_CCG3PA

R3 330E

GREEN LED1 LTST-C190GKT

R20 0E

VBUS_C 3

VBUS_P 3,4

TEST POINTS

TP1 BLACK

TP2 BLACK

TP11 BLACK

CYPRESS SEMICONDUCTOR
198 CHAMPION COURT
SAN JOSE, CA 95134
(408) 943-2600

CYPRESS SEMICONDUCTOR © 2017

SCH Title : CY4532 EZ-PD CCG3PA EVK POWER BOARD

Page Title :INTERFACE

Size	Document Number	Drawn By	Approved By	Rev
A3	630-60304-01	PRVE	HITS	07

Date: Thursday, December 14, 2017 Sheet 3 of 8

SC8802 BATTERY CHARGER & REGULATOR

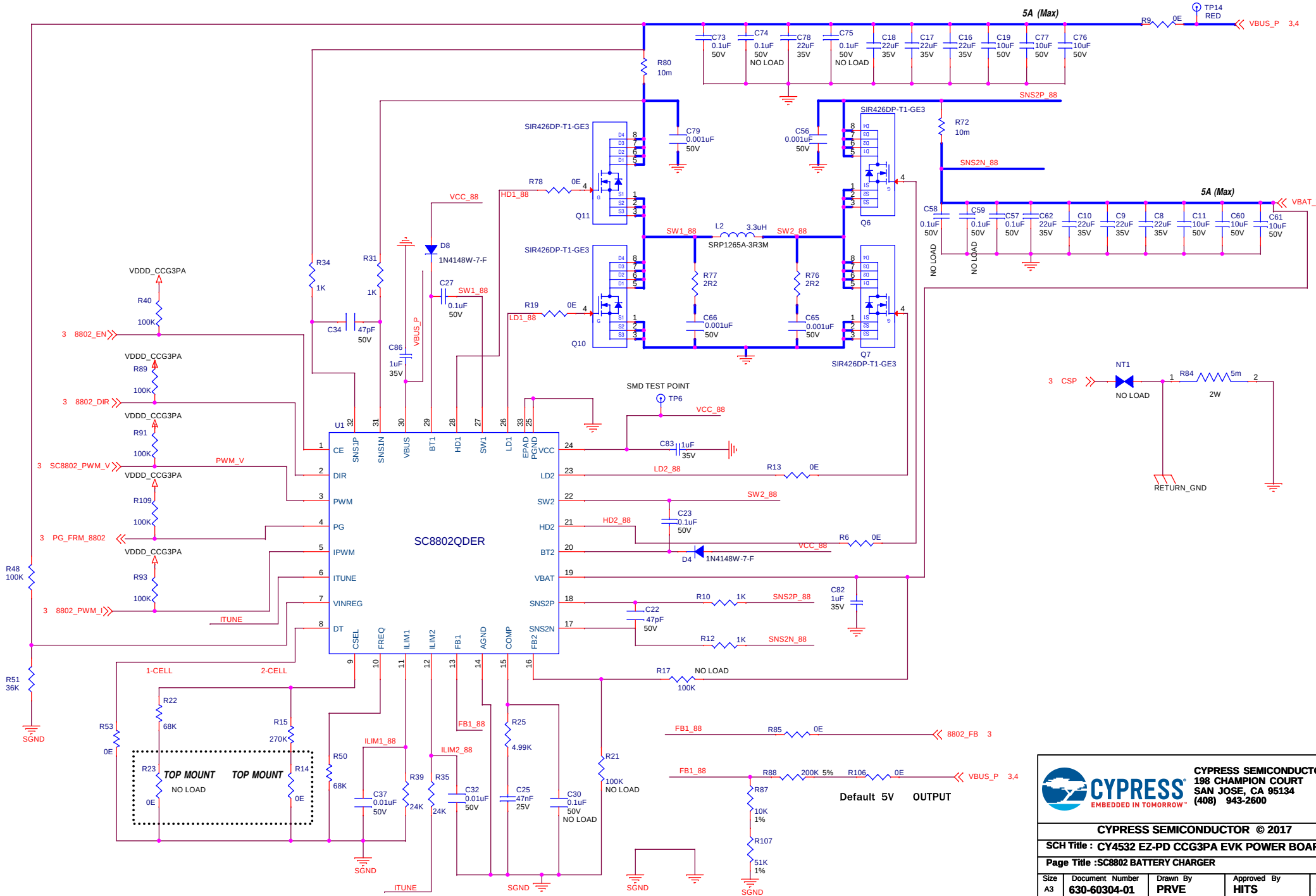

CYPRESS SEMICONDUCTOR
198 CHAMPION COURT
SAN JOSE, CA 95134
(408) 943-2600

CYPRESS SEMICONDUCTOR © 2017

SCH Title : CY4532 EZ-PD CCG3PA EVK POWER BOARD				
Page Title :SC8802 BATTERY CHARGER				
Size A3	Document Number 630-60304-01	Drawn By PRVE	Approved By HITS	Rev 07
Date: Thursday, December 14, 2017		Sheet 4 of 8		

SC8701 BUCK BOOST & TYPE-A SUPPLY

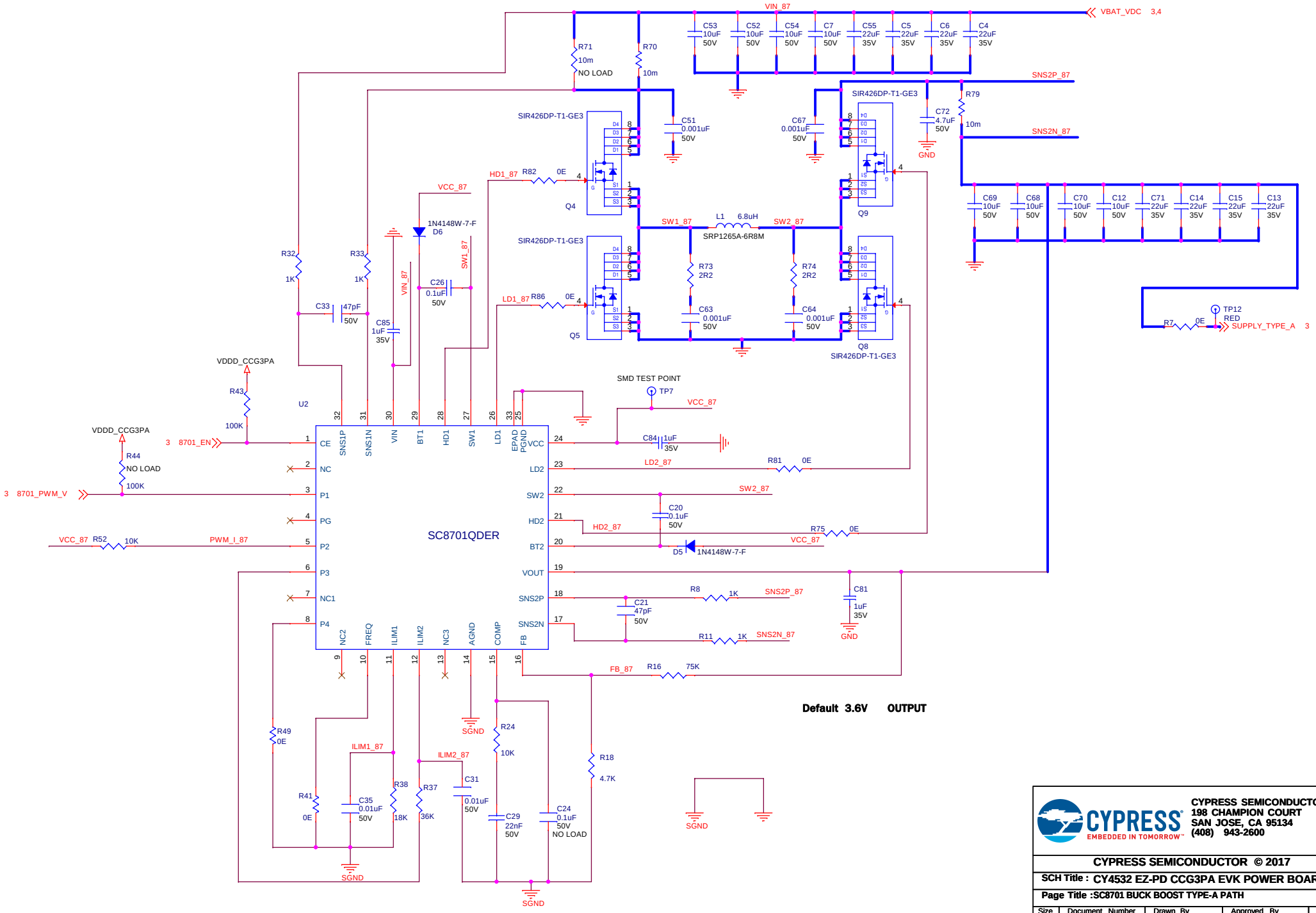

CYPRESS SEMICONDUCTOR
198 CHAMPION COURT
SAN JOSE, CA 95134
(408) 943-2600

CYPRESS SEMICONDUCTOR © 2017

SCH Title : CY4532 EZ-PD CCG3PA EVK POWER BOARD

Page Title :SC8701 BUCK BOOST TYPE-A PATH

Size	Document Number	Drawn By	Approved By	Rev
A3	630-60304-01	PRVE	HITS	07

Date: Thursday, December 14, 2017 Sheet 5 of 8

BOOT LOADER CIRCUITS

USB SERIAL CONNECTIONS

USB MICRO-B

CCG4 CONNECTIONS

TYPE-C RECEPTACLE

MINIPROG CONNECTOR FOR CCG4

BOOT LOADER SUPPLY

LOAD TERMINAL 2

BL_SUPPLY

BL Provider

SI2371EDS-T1-GE3

D9 PMEG3050BEP,115

BL_VBUS

BL Consumer

4A Max

SI2371EDS-T1-GE3

P+ NO LOAD

P- NO LOAD

J4 961102-6404-AR

R97 200K 5%

Q13

R100 49.9K

IRLML9303TRPBF Q18

Q15

R64 499K NO LOAD

Q14 SI2300DS-T1-GE3

BL_P_CTRL

R98 100K

SI2300DS-T1-GE3 Q16

BL_C_CTRL

R101 100K

R108 100K

BL_P_CTRL	BL_C_CTRL	CONSUMER PATH	PROVIDER PATH
0	0	ON	OFF
1	1	OFF	ON

BUMPER CYLIN 0.312" DIA BLK

SJ61A6

SJ61A6

SJ61A6

SJ61A6

JUMPER CLIPS

2-881545-2

2-881545-2

2-881545-2

2-881545-2

TYPE-C BRACKET

TYPE-C BRACKET

TYPE-C BRACKET SCREWS

BRACKET SCREW

BRACKET SCREW

CYPRESS SEMICONDUCTOR
198 CHAMPION COURT
SAN JOSE, CA 95134
(408) 943-2600

CYPRESS SEMICONDUCTOR © 2017

SCH Title : CY4532 EZ-PD CCG3PA EVK POWER BOARD

Page Title :USB SERIAL & CCG4 CONNECTIONS

Size	Document Number	Drawn By	Approved By	Rev
A3	630-60304-01	PRVE	HITS	07

Date: Thursday, December 14, 2017 Sheet 6 of 8

VCONN CONTROL

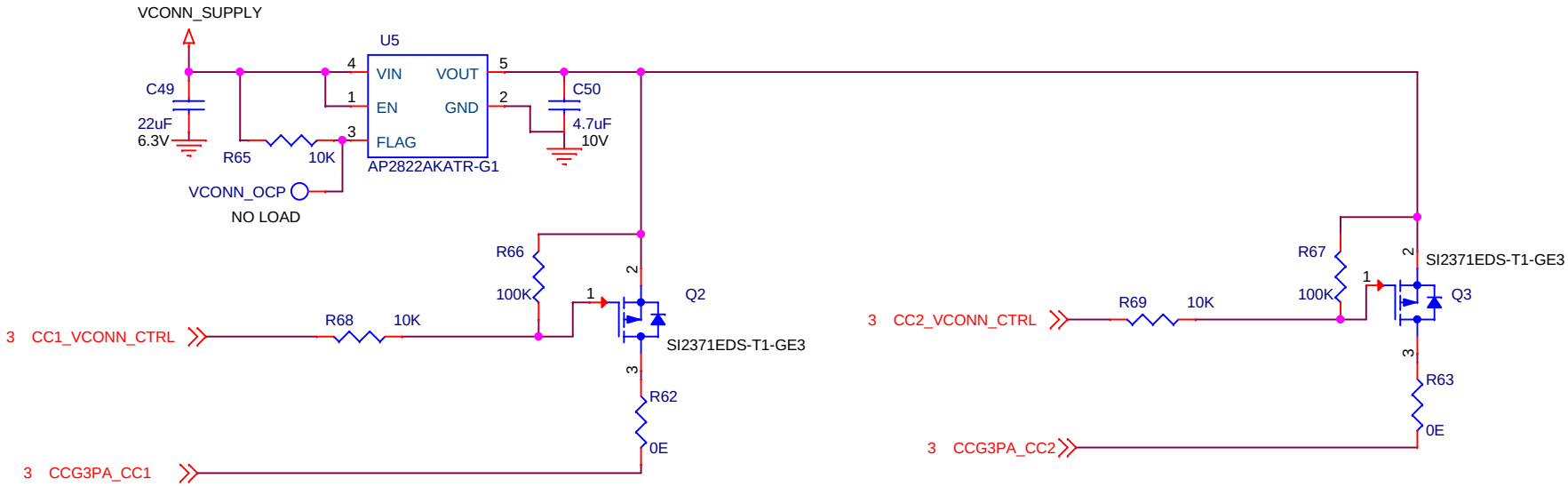

CYPRESS SEMICONDUCTOR
198 CHAMPION COURT
SAN JOSE, CA 95134
(408) 943-2600

CYPRESS SEMICONDUCTOR © 2017

SCH Title : CY4532 EZ-PD CCG3PA EVK POWER BOARD				
Page Title :VCONN_FETS				
Size: A4	Document Number: 630-60304-01	Drawn By: PRVE	Approved By: HITS	Rev: 07
Date: Thursday, December 14, 2017		Sheet 7 of 8		

Change List

REV04	Removed LDO+BOOST and Added TI BUCK BOOST TPS63060 Added reg_sel signal to select regualtor for Type-A Changed the Max input voltage to 12V Removed 5A Fuse Added Pull-ups on /CE,DIR,PWM_V and PWM_I signal for 8802. By default 8802 should be disabled. Adjusted FB resistor values so that Type-C has defualt 5V operation Added zero ohm to enable FB control Removed extra circuit for start-up protection Added Pull-ups on /CE,PWM_V signals for 8701. By default 8701 should be disabled. Removed extra circuit for start-up protection Added consumer transistor with NFET and load terminal for CCG4 Added NFET for Provider PFET control
REV06	R25 Value Changed From 5K To 4.99K Added CCG4 Sink FET (Q18) Replaced Diode With FET for TYPE-A selection(Q17) Replaced Mini-B Connector with Micro-B Changed LED connection to turn it on for VDDD.
REV07	Q17 removed and added D7.

REVISION HISTORY

REV	DESCRIPTION OF CHANGES	DATE
01	INITIAL RELEASE	2017/03/23
02	ALPHA RELEASE	2017/04/28
03	BETA RELEASE	2017/05/02
04	BETA RELEASE	2017/05/24
05	BETA RELEASE	2017/06/16
06	PRODUCTION RELEASE	2017/11/28
07	PRODUCTION RELEASE	2017/12/14

CYPRESS SEMICONDUCTOR
198 CHAMPION COURT
SAN JOSE, CA 95134
(408) 943-2600

CYPRESS SEMICONDUCTOR © 2017

SCH Title : CY4532 EZ-PD CCG3PA EVK POWER BOARD

Page Title :REVISION HISTORY

Size	Document Number	Drawn By	Approved By	Rev
A4	630-60304-01	PRVE	HITS	07

Date: Thursday, December 14, 2017 Sheet 8 of 8